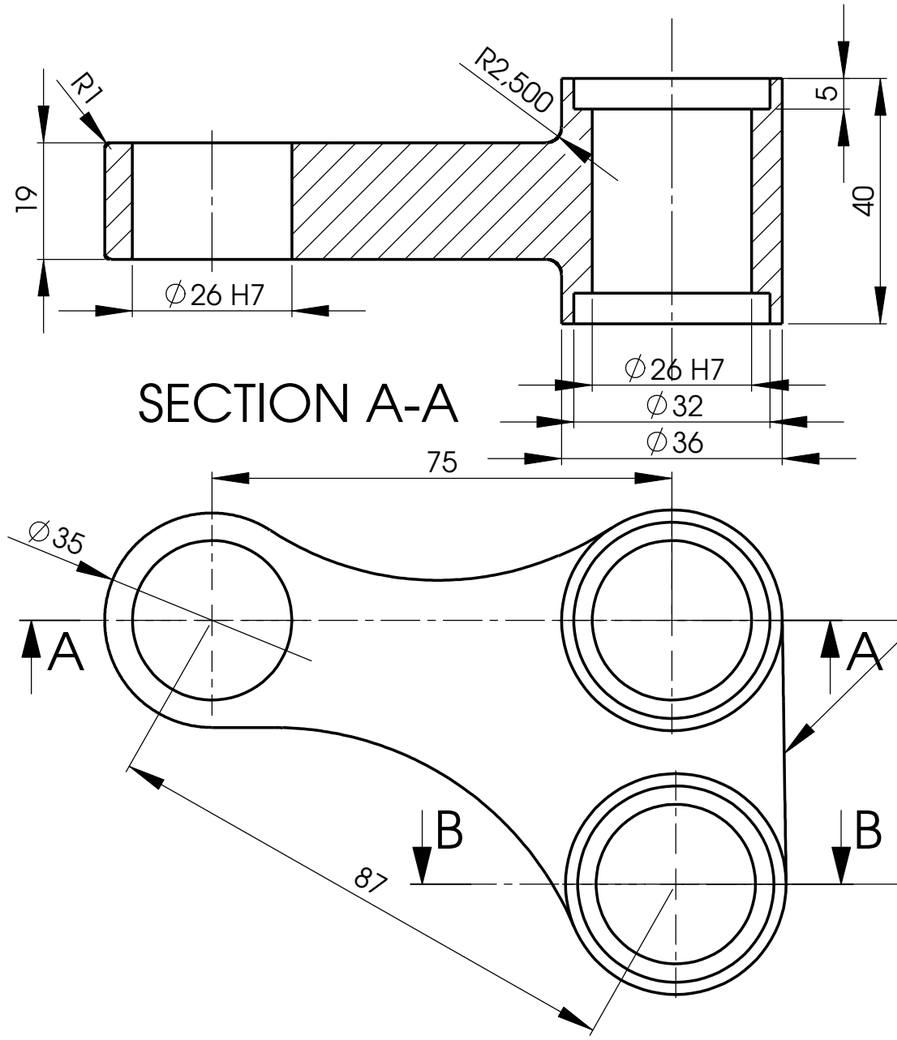

Please check that all measurements are correct.

H7 means a clearance between 0 and +0.021 mm
when the hole is Ø26. This clearance is recommended for bearings.

On this edge there is a 2.5 mm radius

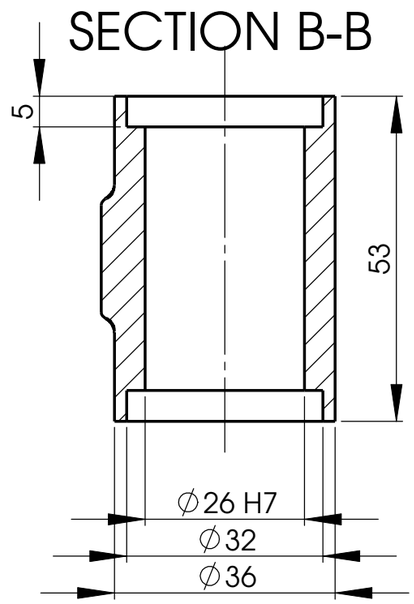

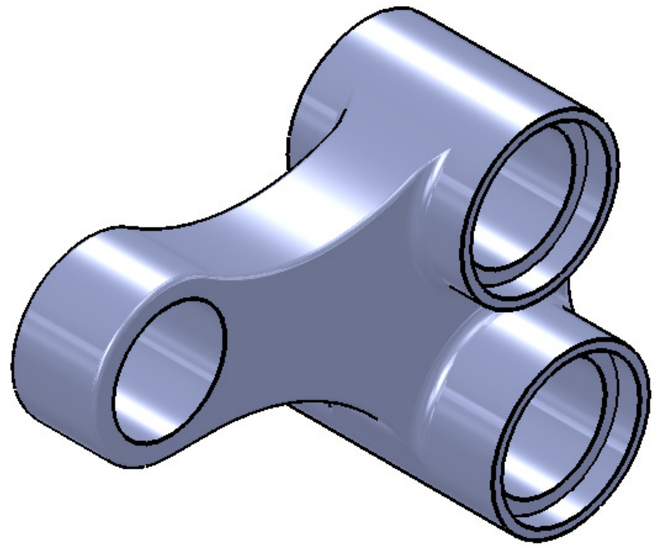

UNLESS OTHERWISE SPECIFIED: DIMENSIONS ARE IN MILLIMETERS SURFACE FINISH: TOLERANCES: LINEAR: ANGULAR:	FINISH:				DEBUR AND BREAK SHARP EDGES	
	NAME	SIGNATURE	DATE			
DRAWN						
CHK'D						
APPV'D						
MFG						
Q.A				MATERIAL:		
				WEIGHT:		

DO NOT SCALE DRAWING

REVISION

TITLE:

Rocker design

DWG NO. Rocker_design

A3

SCALE:1:1

SHEET 1 OF 1