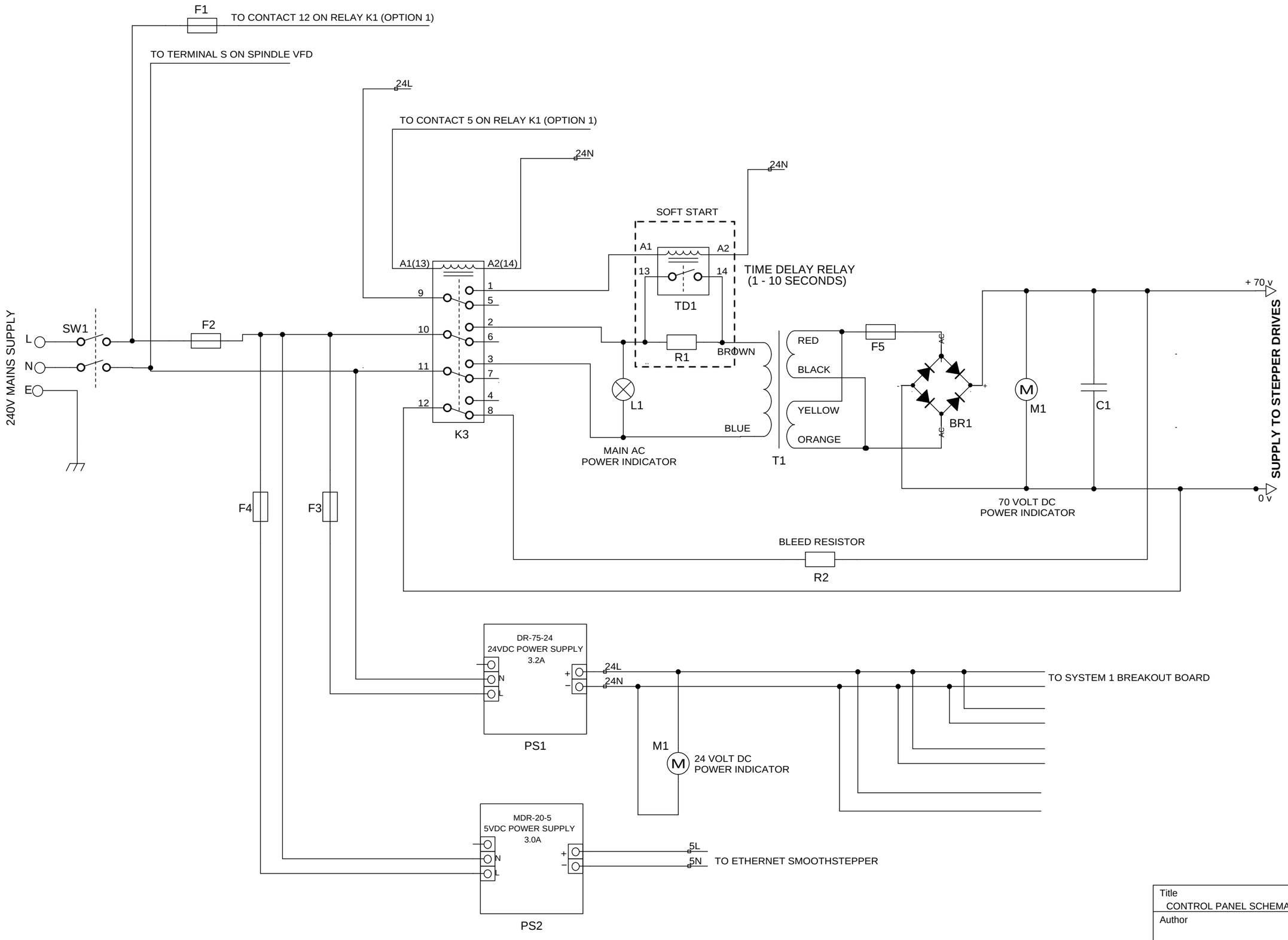

Title CONTROL PANEL SCHEMATIC - POWER SUPPLIES		
Author		
File iles\TinyCAD\Drawings\Control Cabinet2_Ar2.dsn		Document
Revision Ar2	Date	Sheets 2 of 5