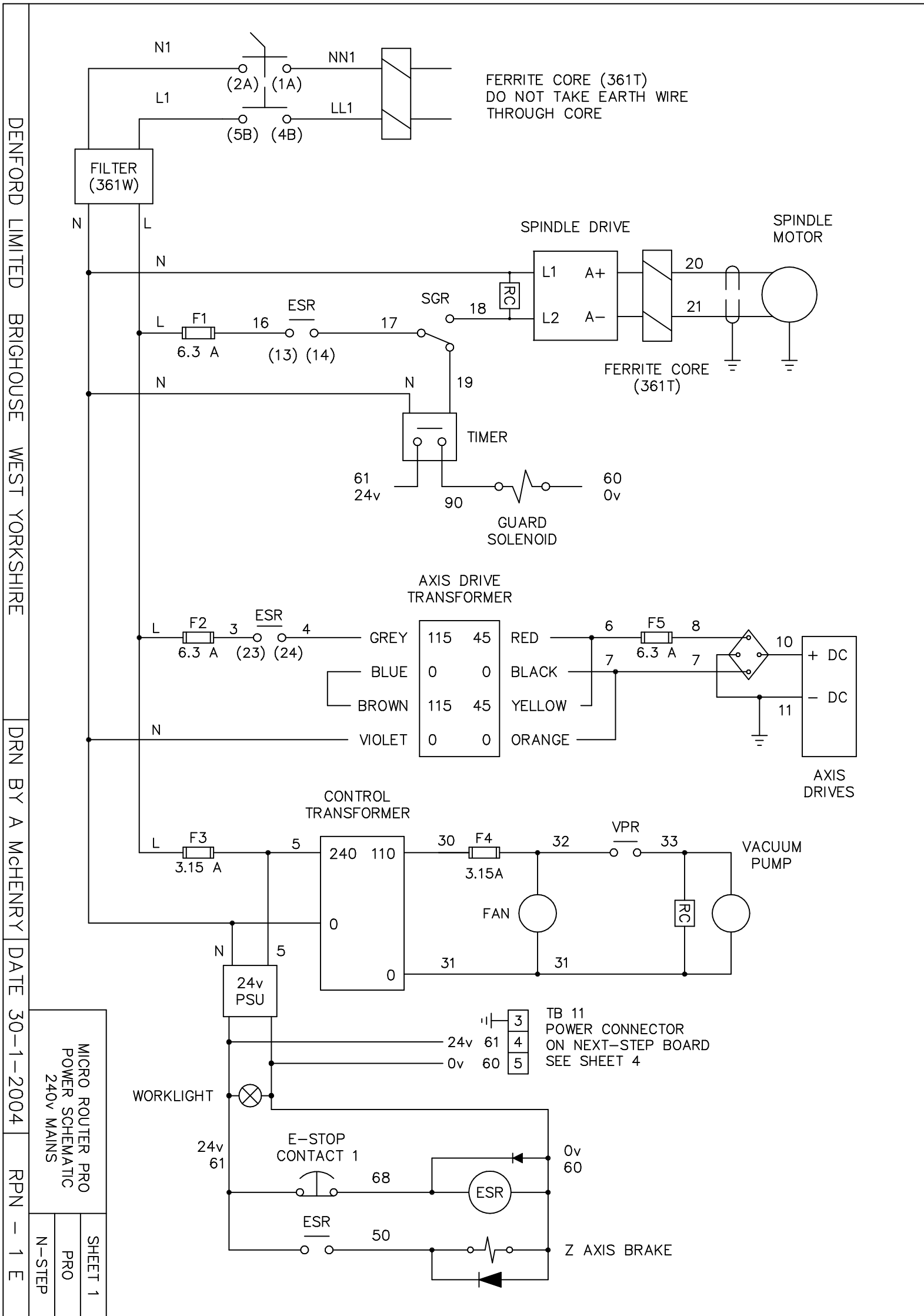
N1
NN1
(2A) (1A)
L1
LL1
(5B) (4B)
FERRITE CORE (361T)
DO NOT TAKE EARTH WIRE
THROUGH CORE
FILTER
(361W)
N
L
SPINDLE DRIVE
SPINDLE
MOTOR
L1 A+
L2 A−
20
21
RC
SGR
18
ESR
L F1 16 17
6.3 A
(13) (14)
FERRITE CORE
(361T)
N
N 19
TIMER
61
24v
90
60
0v
GUARD
SOLENOID
AXIS DRIVE
TRANSFORMER
L F2 3 ESR 4
6.3 A (23) (24)
GREY 115 45 RED
BLUE 0 0 BLACK
BROWN 115 45 YELLOW
VIOLET 0 0 ORANGE
6 F5 8
6.3 A
7 7
10
11
+ DC
− DC
AXIS
DRIVES
N
CONTROL
TRANSFORMER
L F3 5
3.15 A
240 110
0
0
30 F4 32 VPR 33
3.15A
FAN
RC
VACUUM
PUMP
31 31
N 5
24v
PSU
TB 11
POWER CONNECTOR
ON NEXT-STEP BOARD
SEE SHEET 4
3
4
5
24v 61
0v 60
WORKLIGHT
24v
61
E-STOP
CONTACT 1
68
0v
60
ESR
ESR
50
Z AXIS BRAKE
DENFORD LIMITED BRIGHOUSE WEST YORKSHIRE
DRN BY A McHENRY
DATE 30-1-2004
RPN - 1 E
MICRO ROUTER PRO
POWER SCHEMATIC
240v MAINS
N-STEP
PRO
SHEET 1