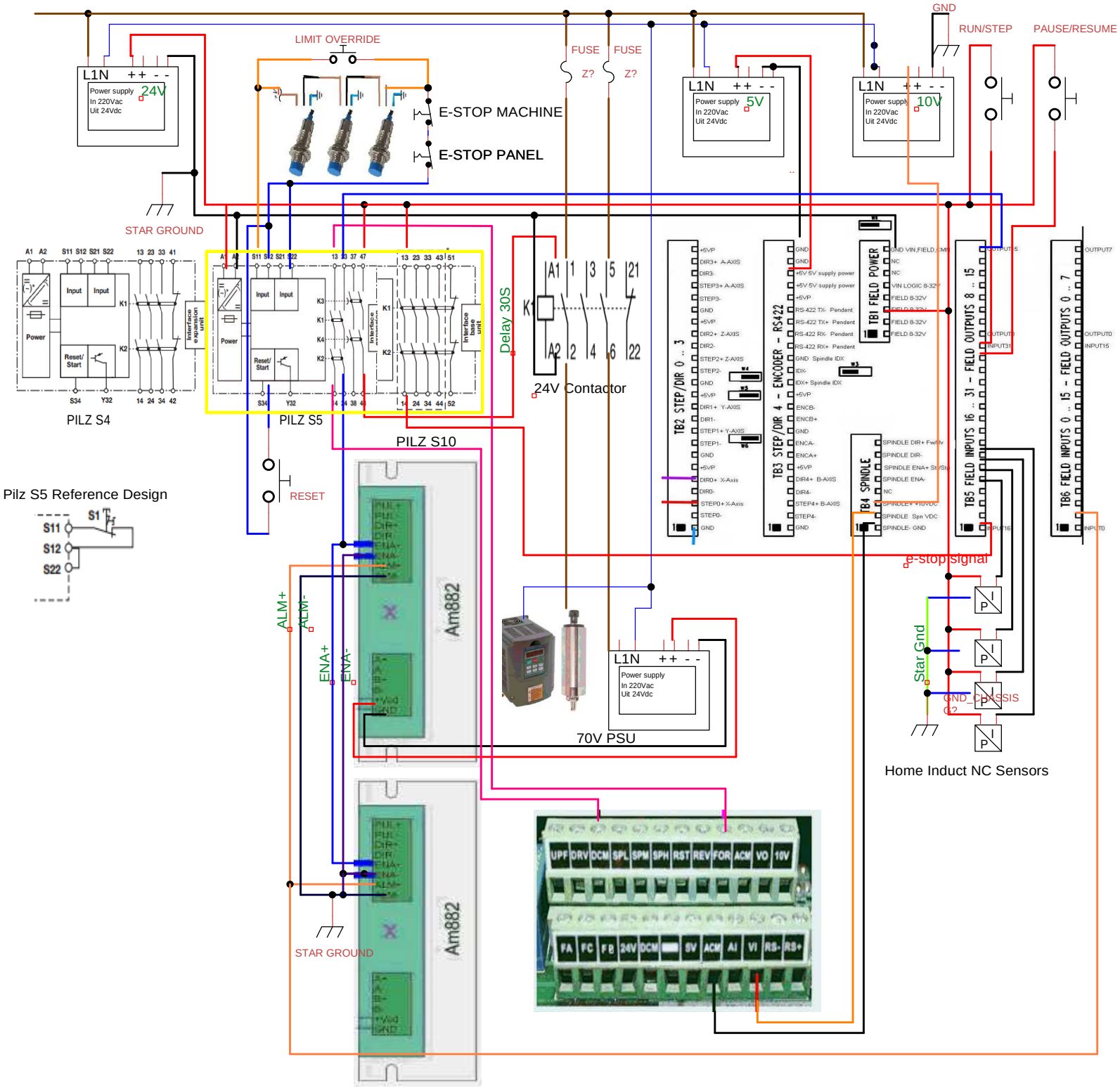


| | | |
|---|---|---|
| Title | | |
| Author | | |
| File :nc\Schema electrque\tinycad cncPA diagram.dsn | | Document |
| Revision 1.0 | Date | Sheets 1 of 1 |