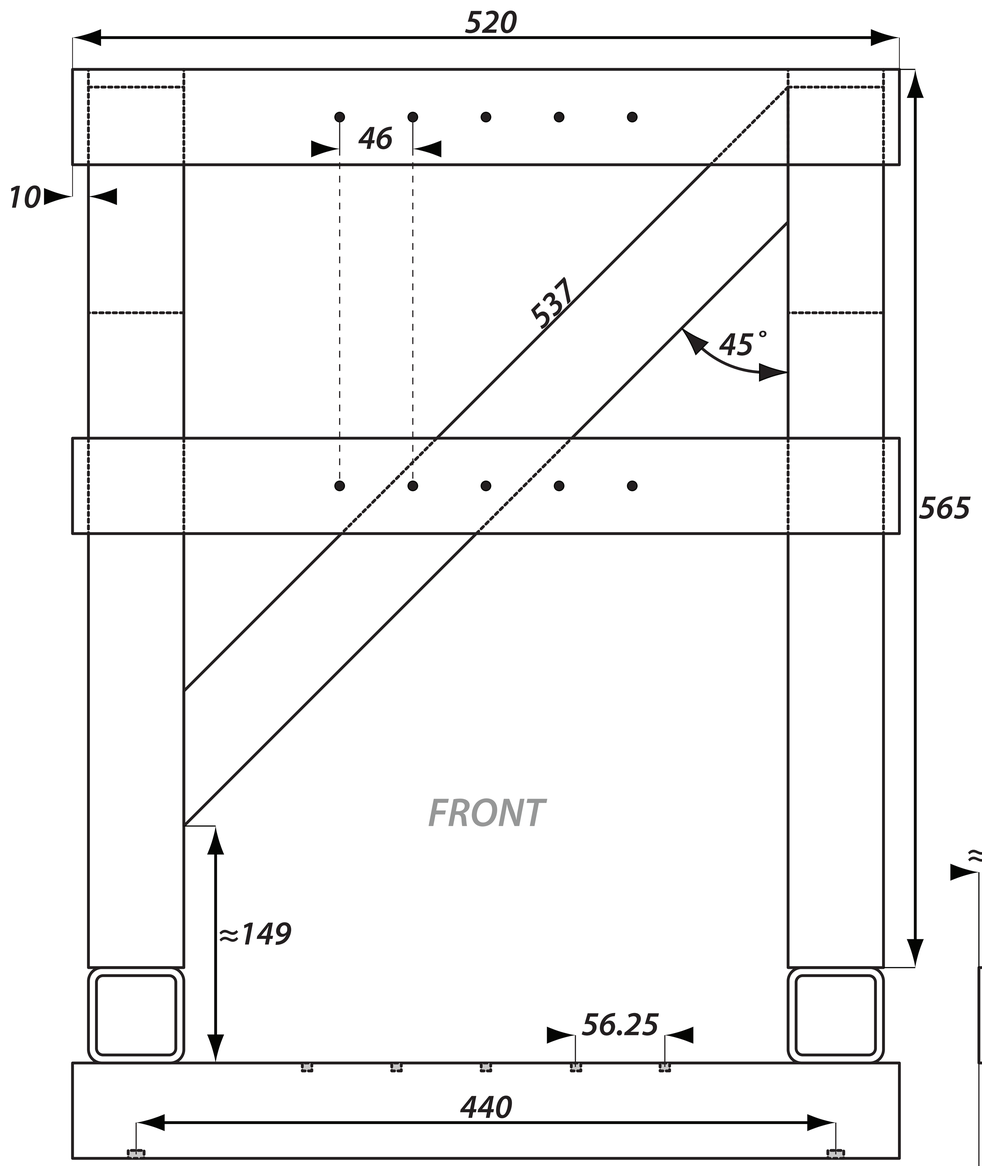

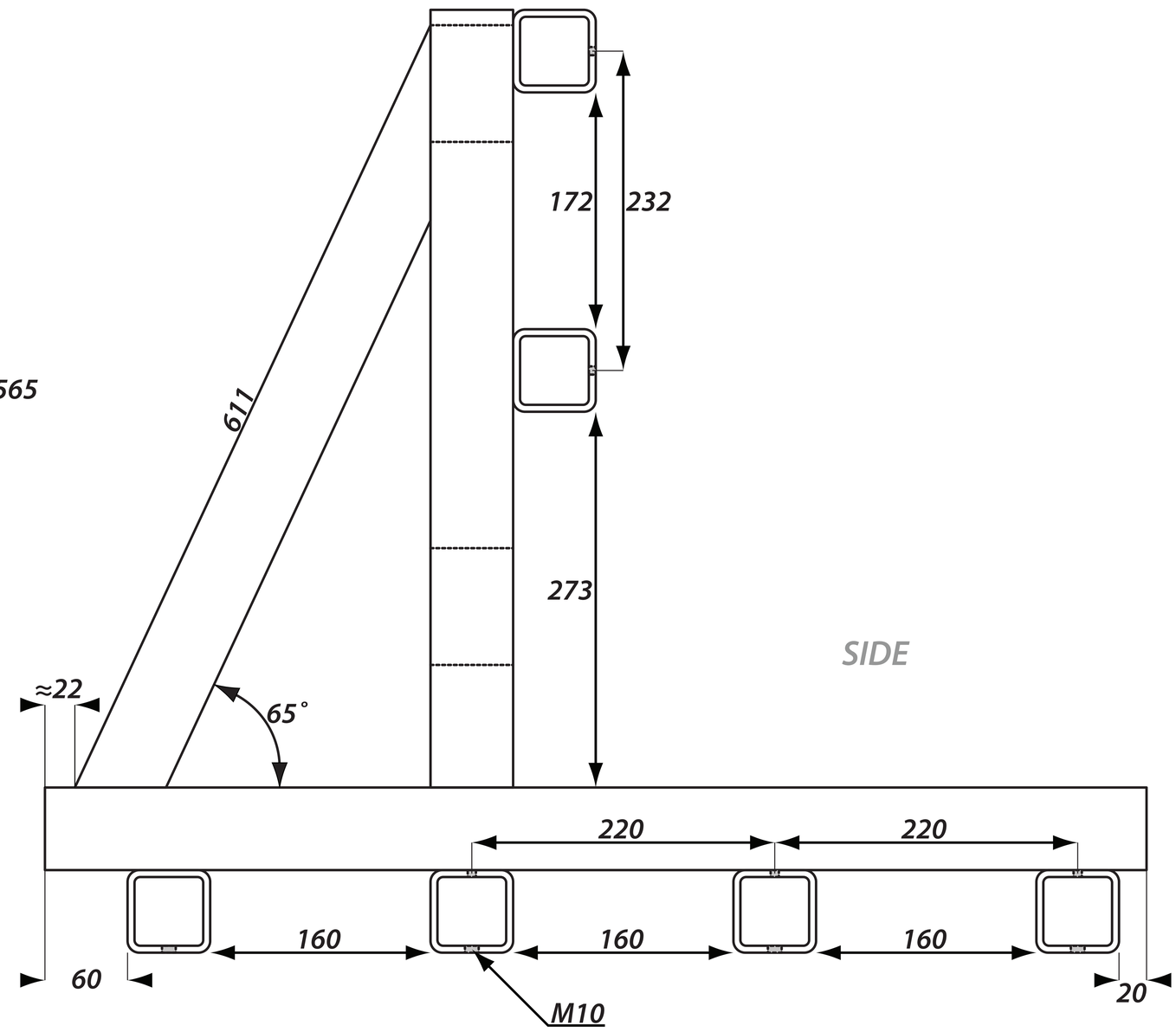

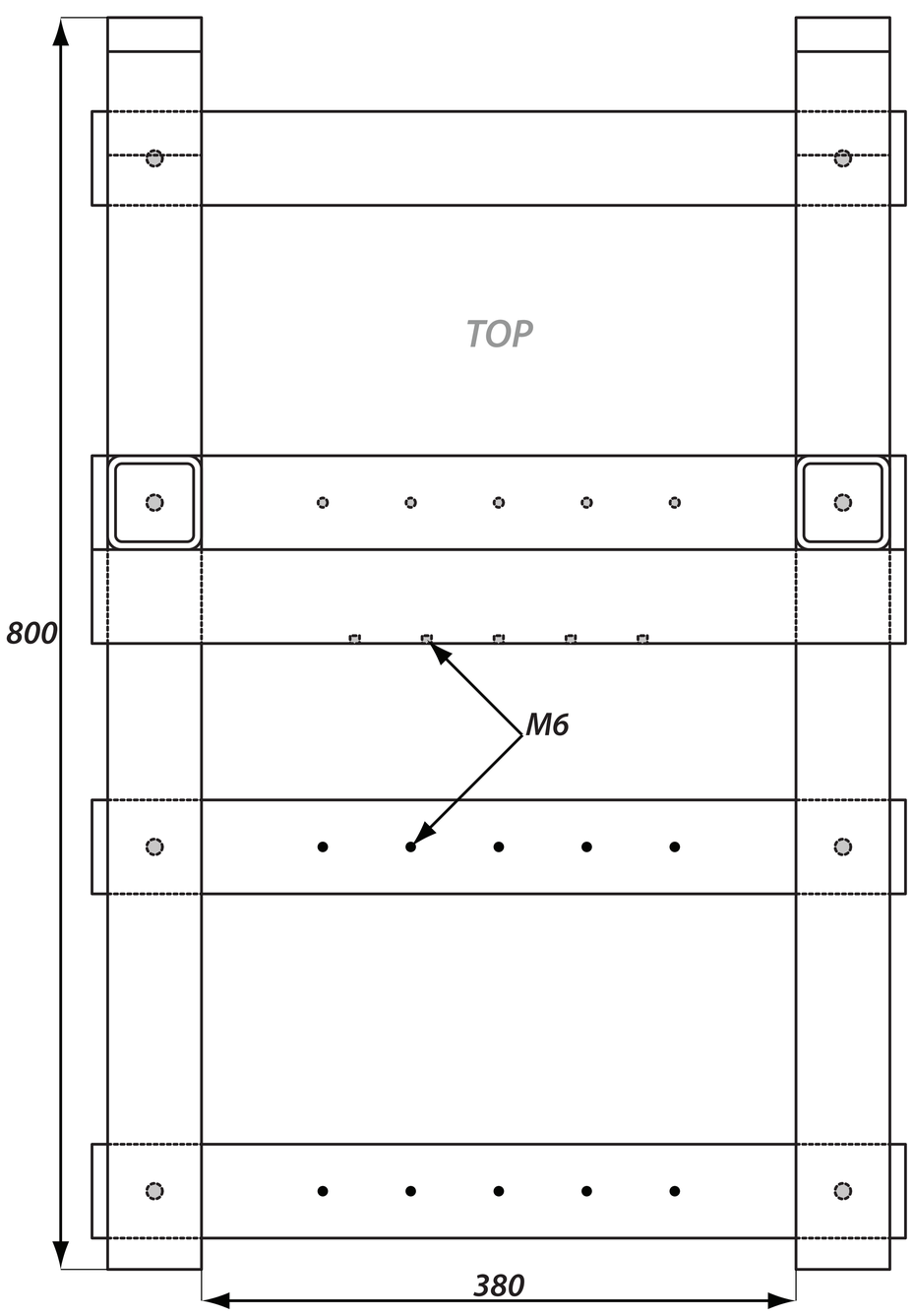

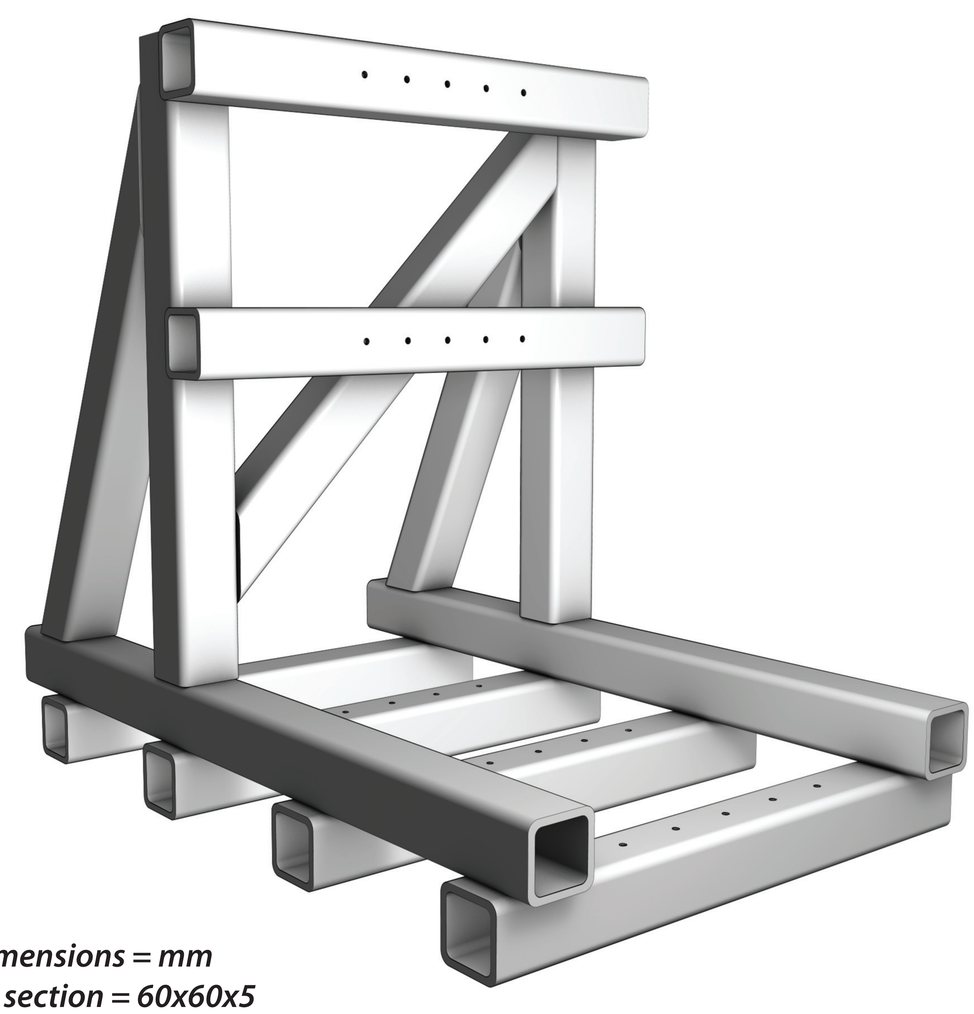

Dimensions = mm
All section = 60x60x5
Dotted lines indicate hidden detail
Threaded holes = 25xM6 (plate mounting) / 8xM10 (adjustable feet)