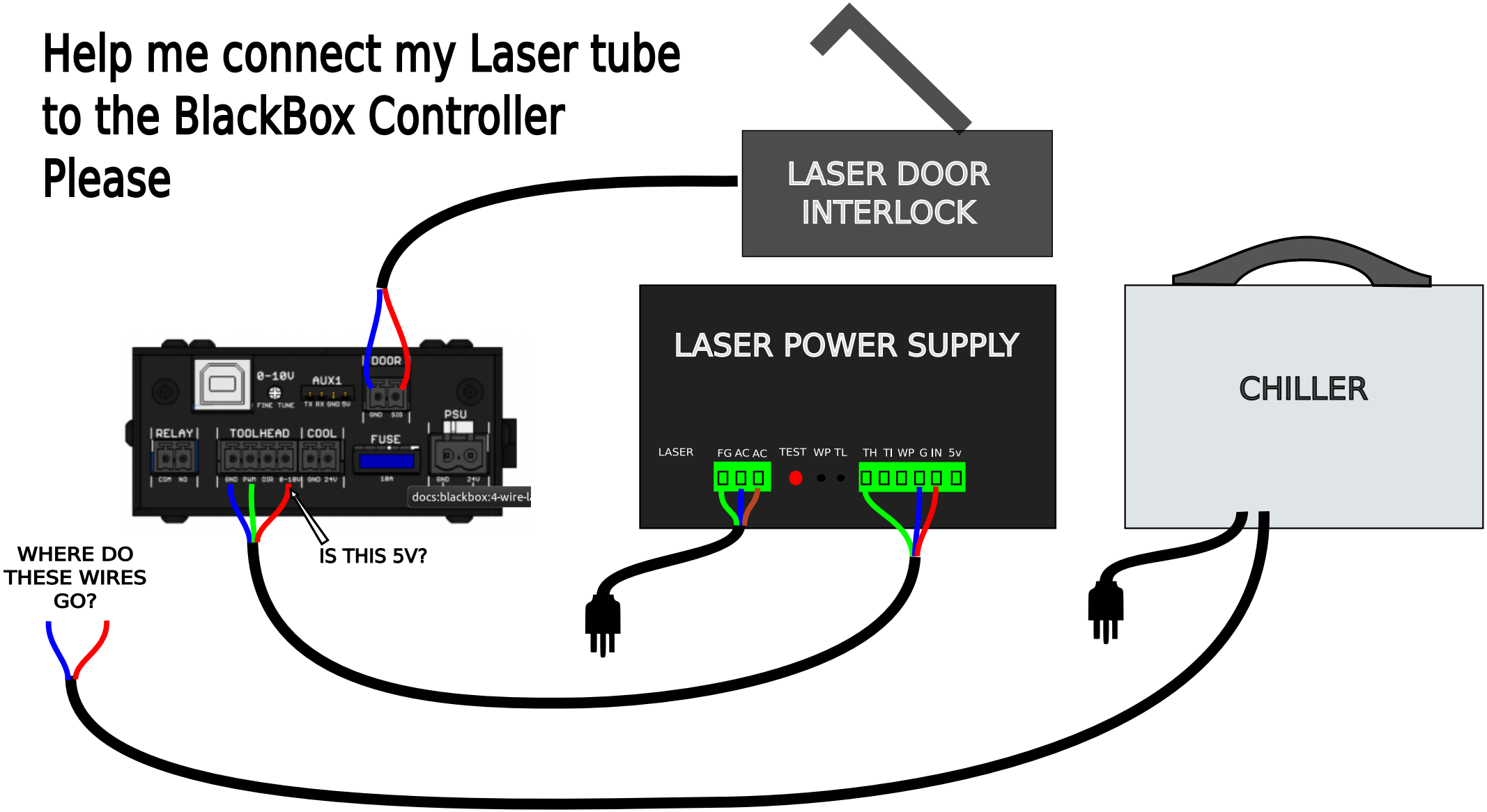Help me connect my Laser tube to the BlackBox Controller Please