NOTES:
1 – UNION TO OPERATE WITH FLOATING SEAL ASSEMBLY HEIGHT SET INSIDE INDICATED AREA.
2 – WHEN ORDERING FROM DEUBLIN USE PART NUMBER: 1154–002–105.
3 – AIR OR AIR/OIL MIST WILL FUNCTION IN A CONTROLLED LEAKAGE CONDITION.

CONFIDENTIAL
THIS DOCUMENT CONTAINS CONFIDENTIAL AND PROPRIETARY INFORMATION OF DEUBLIN COMPANY. COPYING, USE, TRANSMISSION, DISTRIBUTION, AND DISCLOSURE ARE SUBJECT TO THE TERMS AND CONDITIONS CONTAINED IN YOUR AGREEMENT WITH DEUBLIN COMPANY. ALL RIGHTS RESERVED.

⌀16.4	H8	+0.027 / 0	16.427 / 16.4
⌀9	g4	−0.005 / −0.009	8.995 / 8.991
⌀9	H5	+0.006 / 0	9.006 / 9
Dimen.	Fit		

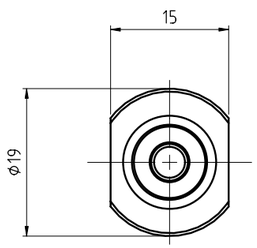

VIEW "C"

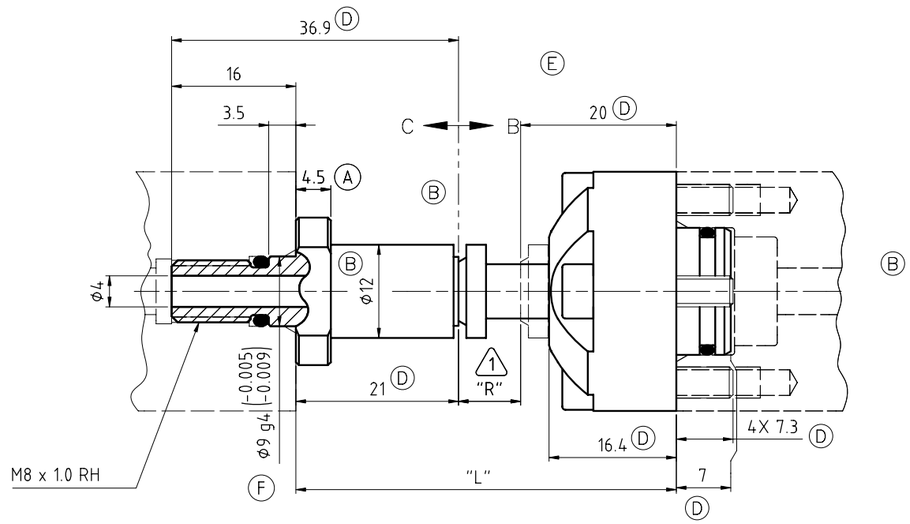

"L" MOUNTING DIM. ±0.25mm	"R" WORKING RANGE (REF.)
49mm	8mm
46mm	5mm
44mm	3mm
42mm	1mm

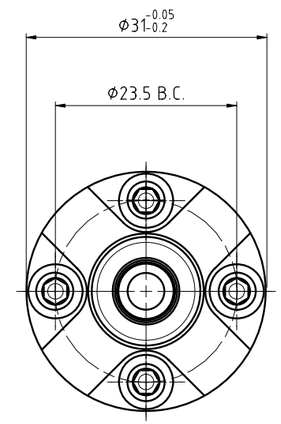

VIEW "B"

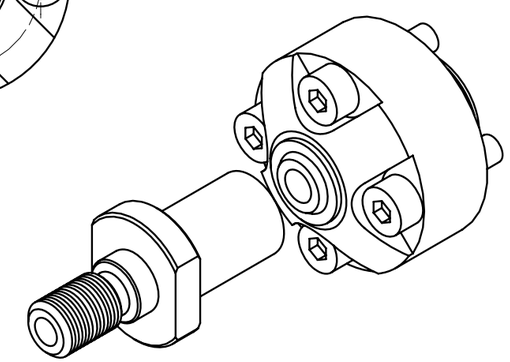

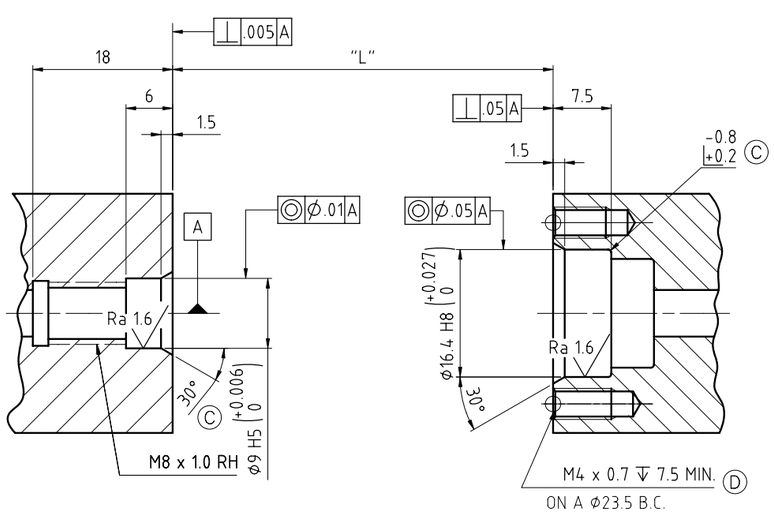

CUSTOMER INTERFACE

G F

OPERATING DATA 3			
MEDIA		COOLANT	MQL OR AIR
PRESSURE	MAXIMUM	140 bar	10 bar
	MINIMUM	3 bar	3 bar
FLOW RATE	MAXIMUM	24.3 L/min	19.6 NL/sec
	MINIMUM	3 L/min	6 NL/sec
TEMPERATURE	MAXIMUM	71 °C	71 °C
	MINIMUM	5 °C	5 °C
MAXIMUM SPEED		40000 min^{-1}	40000 min^{-1}
AXIAL FORCE		3.8 N/bar	
DRY RUN		YES	

DEUBLIN COMPANY
WAUKEGAN, ILLINOIS, U.S.A.

PROJECTION:

SCALE: 2:1
MATERIAL:

ISSUE	MODIFICATION	ECO	DATE	SIGN
G	REVISED DATA CHART	8665	10/07	JK
F	DIMS AND OP. DATA	8282	05/07	NR
E	REMO 28 DIM		07/06	LG
D	REVISED DIMENSIONS		03/06	LMG
C	ADDED		03/06	LMG
B	WAS #10, REVISED		02/06	LMG

	DATE	NAME
DRN.	01/13/2006	galindolm
ENGR.		
APPD.		

UNLESS SPECIFICALLY TOLERANCED, ALL DIMENSIONS ARE CONSIDERED REFERENCE

TITLE: INTERFACE CONTROL DRAWING FOR DEUBLIN UNION 1154-002-105

NO. 1154-002-105-IC

SHEET